APPROVAL - CUSTOMER NAME & SIGNATURE	DATE

NOTES:

A. OPERATION: 195° TURN OF KEY CAUSES PAWL TO ROTATE 75° THEN PULL UP 0.25.
B. PAWL, NUTS, AND LOCKWASHERS SHIPPED UNASSEMBLED IN BAG WITH LATCH ASSEMBLY.
C. INSTALLATION:
   1. INSERT LATCH INTO HOLE IN DOOR. CHECK FOR PROPER ORIENTATION AND OPERATION OF PAWL.
   2. INSTALL USING LOCKWASHER AND MOUNTING NUT (27mm ACROSS FLATS). MAX. TIGHTENING TORQUE 250 in-lb.
   3. INSTALL JAM NUT, LOCKWASHER, PAWL, LOCKWASHER, AND JAM NUT ON SHAFT. ADJUST JAM NUTS TO POSITION PAWL AT CORRECT GRIP (WITH LATCH CLOSED). TIGHTEN JAM NUTS (180 in-lb MAX. TORQUE) USING TWO 17mm WRENCHES.
   4. CAUTION: ADJUST PAWL SO THAT NO MORE THAN 70 in-lb TORQUE ON KEY IS REQUIRED TO CLOSE LATCH.

REV	DATE	DRAWN/CHKD	DESCRIPTION
A	09OCT96	SWD	PRN: S-93-23
B	24APR98	JGK	PRN: E3-689
C	07JUL99	SCK/JSS	PRN: E3-801/E3-806
D	14FEB2001	JRS/JSS	PRN: E3-847A
E	04MAR2003	RLR/MJS	PRN: P2003-0112
F	01MAY2007	BWR/RLR	PRN: P2007-0587
G	28JAN2015	CMS/MWD	PRN: P2015-0219
H	30JAN2019	CMS/MSR	PRN: P2019-0257

ITEM	PART NUMBER	GRIP RANGE	EXTENDED GRIP RANGE	PAWL OFF-SET
LATCH ASSEMBLY	E3-19-1X	0.45-1.07	2.61-3.00	1.08
LATCH ASSEMBLY	E3-19-2X	1.00-1.62	2.07-2.69	0.54
LATCH ASSEMBLY	E3-19-3X	1.53-2.15	NONE	NONE

THE ABOVE PART NUMBERS ARE TYPE "A" (TURN CLOCKWISE TO LATCH). FOR TYPE "B" ASSEMBLIES (TURN COUNTERCLOCKWISE TO LATCH), CHANGE THE THIRD DIGIT OF THE PART NUMBER FROM 1 TO 22. EXAMPLE: E3-223-15

COMPONENT	MATERIAL	FINISH
HOUSING	DIE CAST ZINC	SEE FINISH TABLE
CAP	DIE CAST ZINC	SEE FINISH TABLE
RETAINER	302 STAINLESS STEEL	NATURAL
SPRING	302 STAINLESS STEEL	NATURAL
O-RING	BUNA-N	NATURAL
SLEEVE	1075 STEEL	ZINC IMMERSION COATING †
CAM	1075 STEEL	ZINC IMMERSION COATING †
SHAFT	LOW CARBON STEEL	ZINC PLATE CHROMATE,PLUS SEALER
PIN	1008 STEEL	ZINC PLATE PLUS CHROMATE DIP, YELLOW
PAWL	1010 STEEL	ZINC PLATE CHROMATE,PLUS SEALER
JAM NUTS (2)	LOW CARBON STEEL	ZINC PLATE CHROMATE,PLUS SEALER
LOCKWASHERS (2)	SPRING STEEL	ZINC PLATE CHROMATE,PLUS SEALER
MOUNTING NUT	DIE CAST ZINC	ZINC PLATE,BRIGHT CHROMATE
MOUNTING LOCKWASHER	SPRING STEEL	ZINC PLATE CHROMATE,PLUS SEALER

X FINISH TABLE

1 - BRIGHT CHROME PLATE
5 - BLACK POWDER COAT
6 - LIGHT GREY POWDER COAT
7 - SATIN SILVER POLYESTER POWDER COAT
8 - SILVER METALLIC URETHANE POWDER COAT

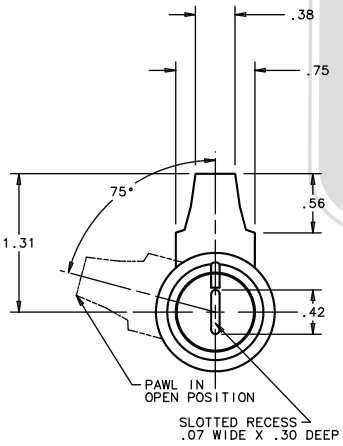

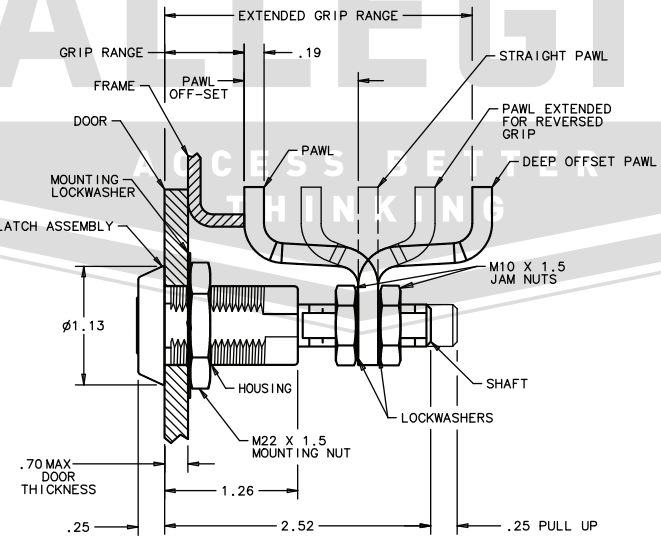

DOOR PREPARATION

METHOD A

METHOD B

(NOT RECOMMENDED FOR GASKETED APPLICATIONS)

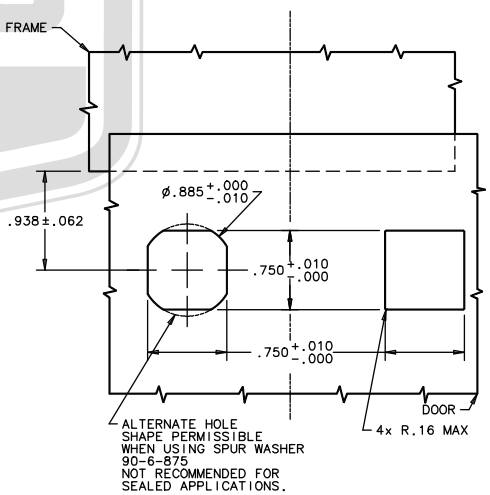

+ TM - METAL COATINGS INTERNATIONAL, INC.

ALLEGIS ACCESS BETTER THINKING

ALLEGIS	1-866-378-7550
MATERIAL: Zinc Alloy	DRAWING NO.: E3-19-35
FINISH: Powder Coat	
REV.: 1:1	DATE: 5/29/2019